Wedge Grips

Self Tightening wedge action grips

A range of wedge action grips for general tension testing of metals and plastic. The wedge design of the grip means the grip tightens on the sample as the force increases, initial force can be applied by various methods such as side lever, capstan action wheel or screw action. Faces are interchangeable for different samples types and dimensions.

Steel, manganese phosphate coated
Temperature range 0 – to +130º C

Part Number	Description	Weight	Rating	Fixing
01/4644	Wedge grip without faces	0.9kg	5kN	5/8 inch

Face options

Part Number	Description	Opening	Quantity	Rating
01/4645	40mm x 10mm crosscut faces for 01/4644	0-10mm	Set of 4	2kN
01/4646	V-Notch faces, 2mm – 10mm Ø samples for 01/4644	2-10mm	Set of 4	2kN

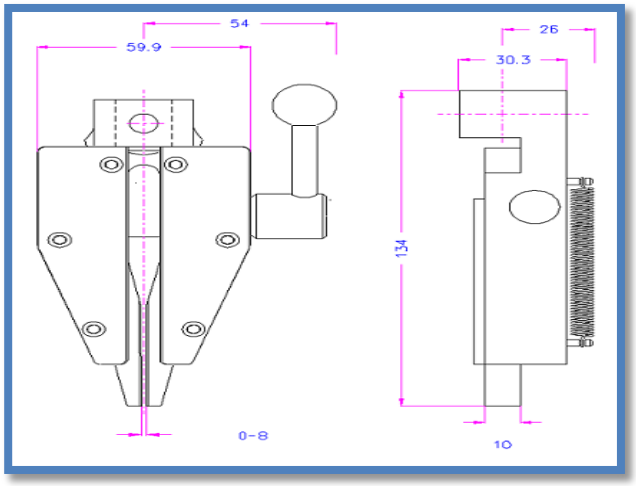

Wedge Grips

Self Tightening wedge action grips

A range of wedge action grips for general tension testing of metals and plastic. The wedge design of the grip means the grip tightens on the sample as the force increases, initial force can be applied by various methods such as side lever, capstan action wheel or screw action. Faces are interchangeable for different samples types and dimensions.

Steel, manganese phosphate coated
Temperature range 0 – to +130º C

Part Number	Description	Weight	Rating	Fixing
01/4647	Wedge grip without faces	1.36kg	10kN	5/8 inch

Face options

Part Number	Description	Opening	Quantity	Rating
01/4648	30mm x 30mm crosscut faces for 01/4647	0-10mm	Set of 4	5kN
01/4649	V-Notch faces, 2mm – 10mm Ø samples for 01/4647	2-10mm	Set of 4	5kN

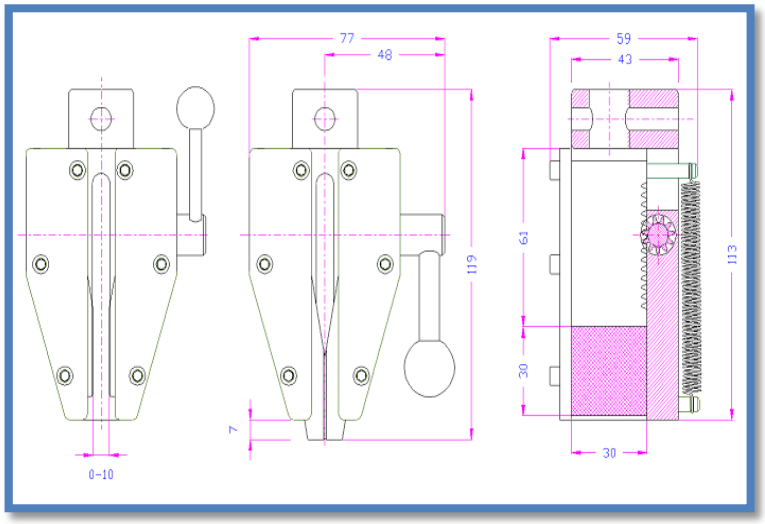

AMETEK
TEST & CALIBRATION INSTRUMENTS

Wedge Grips

Self Tightening wedge action grips

A range of wedge action grips for general tension testing of metals and plastic. The wedge design of the grip means the grip tightens on the sample as the force increases, initial force can be applied by various methods such as side lever, capstan action wheel or screw action. Faces are interchangeable for different samples types and dimensions.

Steel, manganese phosphate coated
Temperature range 0 – to +130º C

Part Number	Description	Weight	Rating	Fixing
01/4650	Wedge grip, lever actuated without faces	1.83kg	10kN	5/8 inch

Face options

Part Number	Description	Opening	Quantity	Rating
01/4651	34mm x 40mm Crosscut Jaws	0-9mm	Set of 4	10kN
01/4774	V-Notch faces, clamping height 40mm	3-9mm	Set of 4	10kN

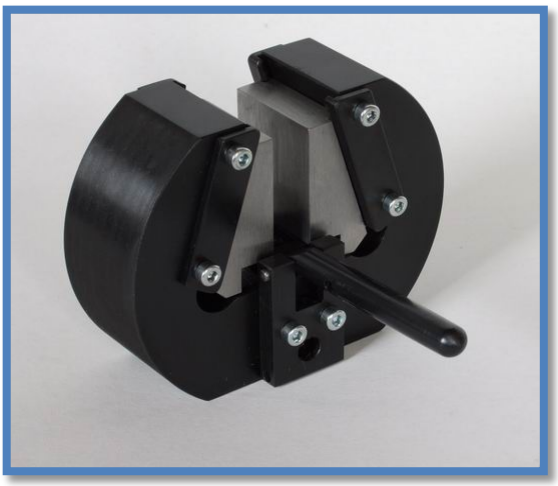

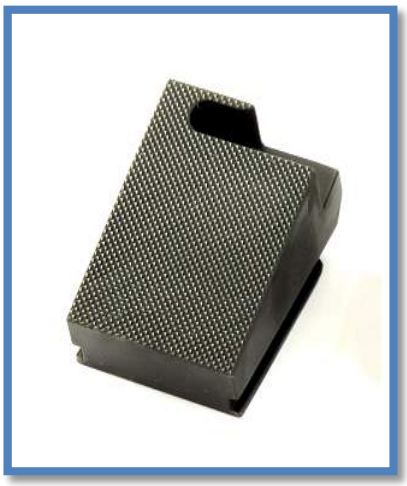

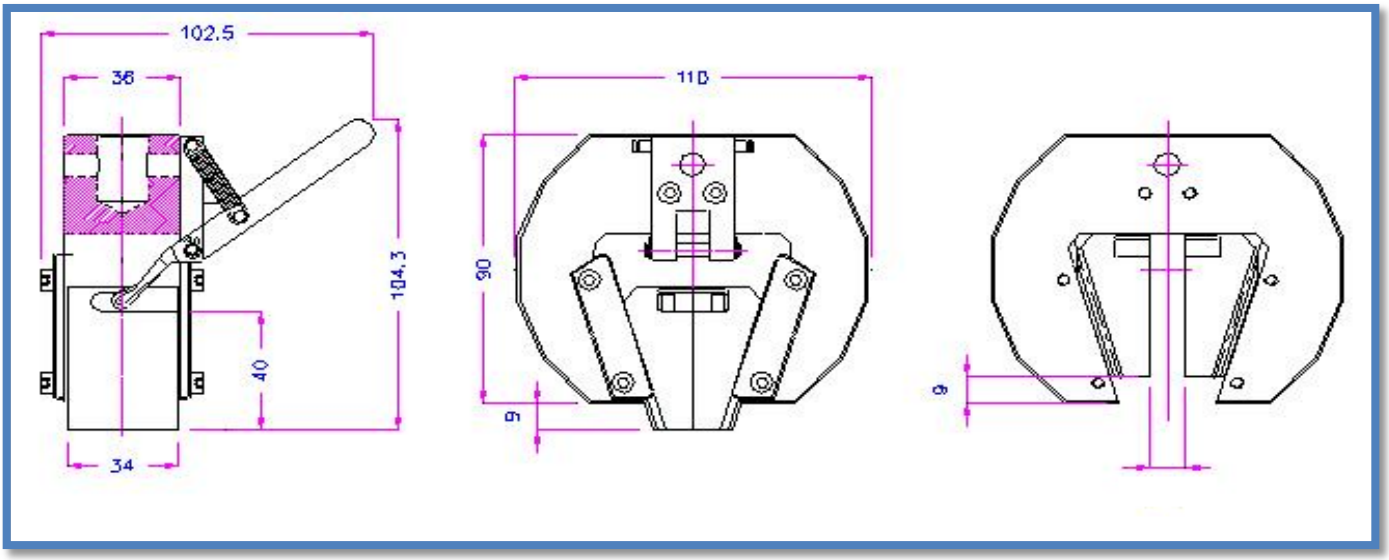

AMETEK
TEST & CALIBRATION INSTRUMENTS

Wedge Grips

Self Tightening wedge action grips

A range of wedge action grips for general tension testing of metals and plastic. The wedge design of the grip means the grip tightens on the sample as the force increases, initial force can be applied by various methods such as side lever, capstan action wheel or screw action. Faces are interchangeable for different samples types and dimensions.

Steel, manganese phosphate coated
Temperature range 0 – to +130º C

Part Number	Description	Weight	Rating	Fixing
01/4652	Wedge grip without faces	3.8kg	20kN	5/8 inch

Face options

Part Number	Description	Opening	Quantity	Rating
01/4656	50mm x 35mm crosscut jaw faces	0-13mm	Set of 4	20kN
01/4557	50mm x 35mm crosscut jaw faces	4-16mm	Set of 4	20kN
01/4658	V-Notch faces, 50mm long, 3mm to 13mm Ø samples	3-13mm	Set of 4	50kN
01/4659	V-Notch faces, 50mm long, 4mm to 16mm Ø samples	4-16mm	Set of 4	50kN

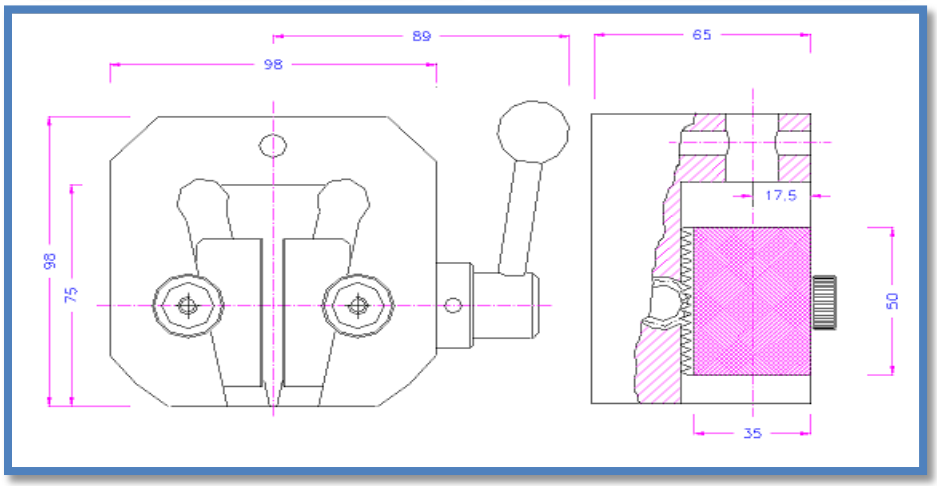

AMETEK
TEST & CALIBRATION INSTRUMENTS

Wedge Grips

Self Tightening wedge action grips

A range of wedge action grips for general tension testing of metals and plastic. The wedge design of the grip means the grip tightens on the sample as the force increases, initial force can be applied by various methods such as side lever, capstan action wheel or screw action. Faces are interchangeable for different samples types and dimensions.

Steel, Nickel Plated
Temperature range -70 – to +280º C

Part Number	Description	Weight	Rating	Fixing
01/4653	Wedge grip without faces, extended temperature range	3.8kg	20kN	5/8 inch

Face options

Part Number	Description	Opening	Quantity	Rating
01/4656	50mm x 35mm crosscut jaw faces	0-13mm	Set of 4	20kN
01/4557	50mm x 35mm crosscut jaw faces	4-16mm	Set of 4	20kN
01/4658	V-Notch faces, 50mm long, 3mm to 13mm Ø samples	3-13mm	Set of 4	50kN
01/4659	V-Notch faces, 50mm long, 4mm to 16mm Ø samples	4-16mm	Set of 4	50kN

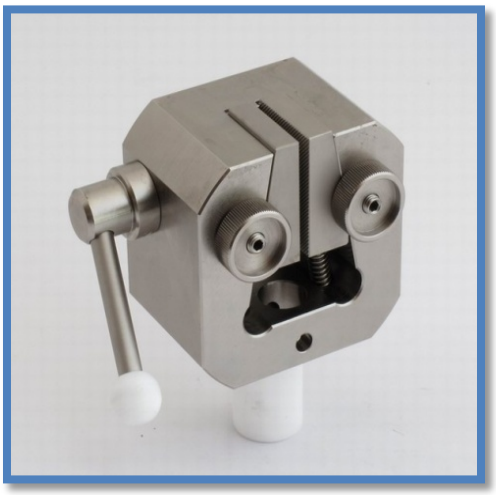

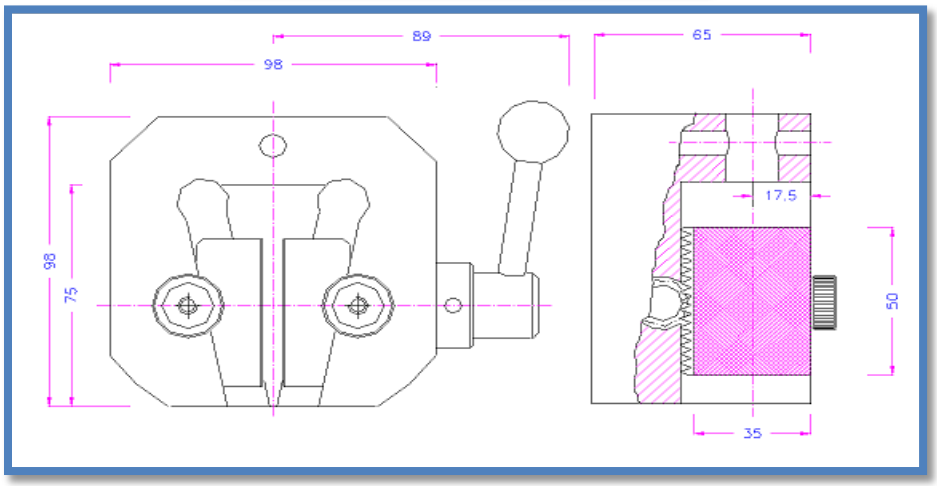

AMETEK
TEST & CALIBRATION INSTRUMENTS

Wedge Grips

Self Tightening wedge action grips

A range of wedge action grips for general tension testing of metals and plastic. The wedge design of the grip means the grip tightens on the sample as the force increases, initial force can be applied by various methods such as side lever, capstan action wheel or screw action. Faces are interchangeable for different samples types and dimensions.

Steel, manganese phosphate coated
Temperature range 0 – to +130º C

Part Number	Description	Weight	Rating	Fixing
01/4654	Wedge grip without faces	6.75kg	50kN	1 ¼ inch

Face options

Part Number	Description	Opening	Quantity	Rating
01/4656	50mm x 35mm crosscut jaw faces	0-13mm	Set of 4	20kN
01/4557	50mm x 35mm crosscut jaw faces	4-16mm	Set of 4	20kN
01/4658	V-Notch faces, 50mm long, 3mm to 13mm Ø samples	3-13mm	Set of 4	50kN
01/4659	V-Notch faces, 50mm long, 4mm to 16mm Ø samples	4-16mm	Set of 4	50kN

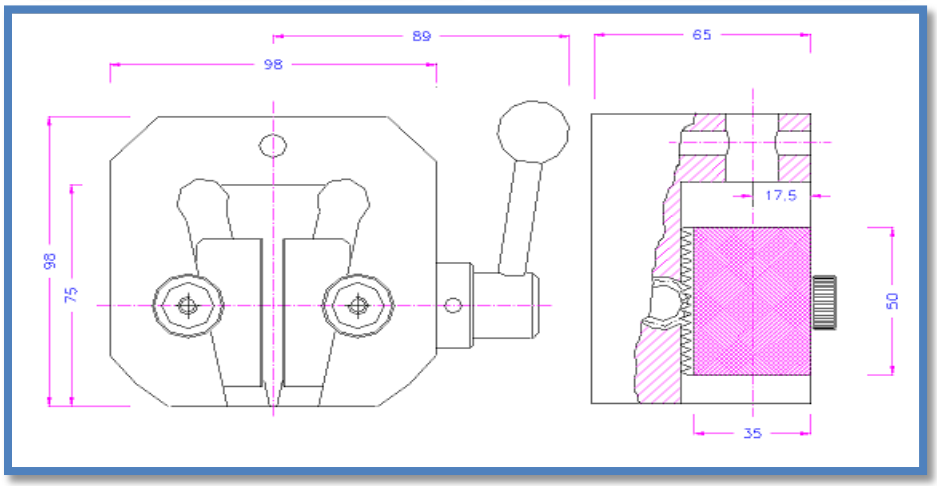

AMETEK
TEST & CALIBRATION INSTRUMENTS

Wedge Grips

Self Tightening wedge action grips

A range of wedge action grips for general tension testing of metals and plastic. The wedge design of the grip means the grip tightens on the sample as the force increases, initial force can be applied by various methods such as side lever, capstan action wheel or screw action. Faces are interchangeable for different samples types and dimensions.

Steel, Nickel Plated
Temperature range -70 – to +280º C

Part Number	Description	Weight	Rating	Fixing
01/4655	Wedge grip without faces, extended temperature range	6.75kg	50kN	1 ¼ inch

Face options

Part Number	Description	Opening	Quantity	Rating
01/4656	50mm x 35mm crosscut jaw faces	0-13mm	Set of 4	20kN
01/4557	50mm x 35mm crosscut jaw faces	4-16mm	Set of 4	20kN
01/4658	V-Notch faces, 50mm long, 3mm to 13mm Ø samples	3-13mm	Set of 4	50kN
01/4659	V-Notch faces, 50mm long, 4mm to 16mm Ø samples	4-16mm	Set of 4	50kN

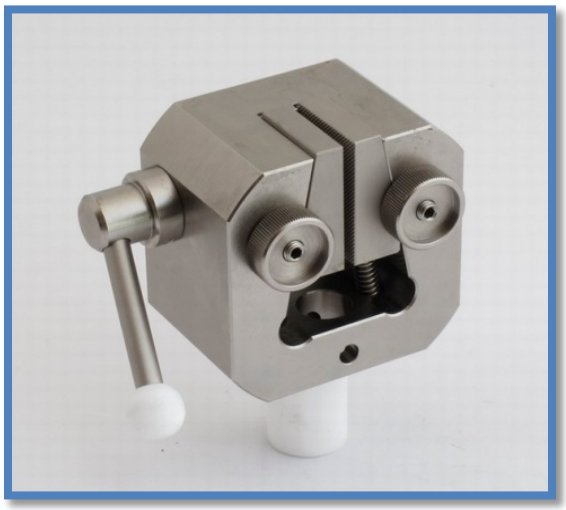

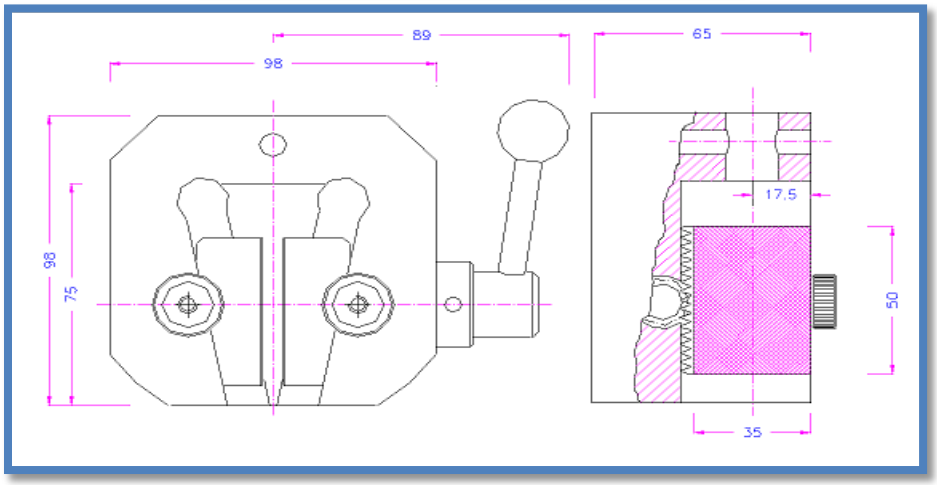

AMETEK
TEST & CALIBRATION INSTRUMENTS

Wedge Grips

Self Tightening wedge action grips

A range of wedge action grips for general tension testing of metals and plastic. The wedge design of the grip means the grip tightens on the sample as the force increases, initial force can be applied by various methods such as side lever, capstan action wheel or screw action. Faces are interchangeable for different samples types and dimensions.

Steel, manganese phosphate coated
Temperature range 0 – to +130º C

Part Number	Description	Weight	Rating	Fixing
01/4660	Wedge grip without faces	11kg	50kN	1 ¼ inch

Face options

Part Number	Description	Quantity	Rating
01/4662	Carrier insert for insert jaw sets	Set of 4	50kN
01/4663	Crosscut faces for samples 0mm to 17mm thick	Set of 4	50kN
01/4664	Crosscut faces for samples 3mm to 21mm thick	Set of 4	50kN
01/4665	Crosscut faces for samples 8mm to 26mm thick	Set of 4	50kN
01/4666	V-Notch faces for samples 4mm to 17mm diameter	Set of 4	50kN
01/4667	V-Notch faces for samples 8mm to 21mm diameter	Set of 4	50kN
01/4668	V-Notch faces for samples 13mm to 26mm diameter	Set of 4	50kN
01/4669	Diamond coated faces for samples 0mm to 17mm thick	Set of 4	50kN
01/4670	Diamond coated faces for samples 3mm to 21mm thick	Set of 4	50kN
01/4671	Crosscut coated faces for samples 8mm to 26mm thick	Set of 4	50kN
01/4672	Crosscut faces for samples 0mm to 20mm thick	Set of 4	50kN
01/4673	Crosscut faces for samples 10mm to 30mm thick	Set of 4	50kN
01/4674	Crosscut faces for samples 20mm to 40mm thick	Set of 4	50kN
01/4675	V-Notch faces for samples 4mm to 20mm diameter	Set of 4	50kN
01/4676	V-Notch faces for samples 12mm to 30mm diameter	Set of 4	50kN
01/4677	V-Notch faces for samples 24mm to 40mm diameter	Set of 4	50kN

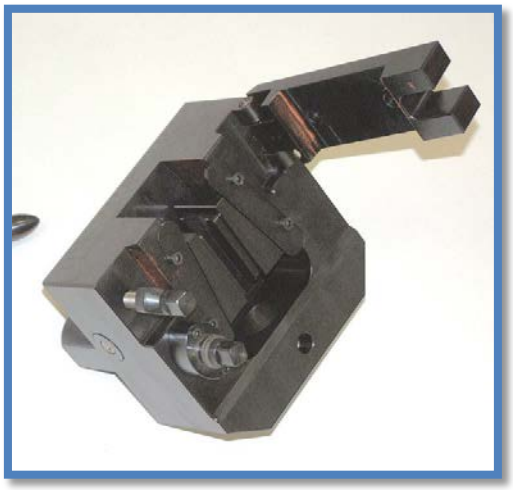

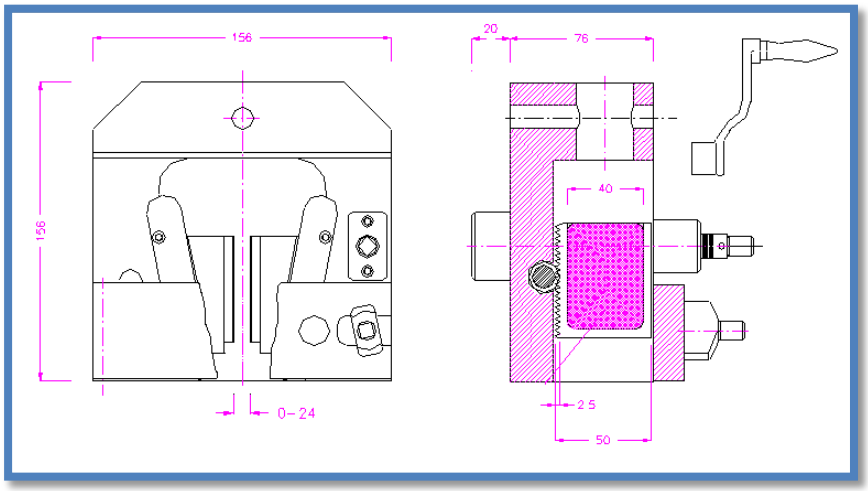

AMETEK
TEST & CALIBRATION INSTRUMENTS

Wedge Grips

Self Tightening wedge action grips

A range of wedge action grips for general tension testing of metals and plastic. The wedge design of the grip means the grip tightens on the sample as the force increases, initial force can be applied by various methods such as side lever, capstan action wheel or screw action. Faces are interchangeable for different samples types and dimensions.
A motorised version of the 01/4660

Steel, manganese phosphate coated
Temperature range 0 – to +130º C

Part Number	Description	Weight	Rating	Fixing
01/4661	Motorised wedge grip without faces	12.5kg	50kN	1 ¼ inch

Face options

Part Number	Description	Quantity	Rating
01/4662	Carrier insert for insert jaw sets	Set of 4	50kN
01/4663	Crosscut faces for samples 0mm to 17mm thick	Set of 4	50kN
01/4664	Crosscut faces for samples 3mm to 21mm thick	Set of 4	50kN
01/4665	Crosscut faces for samples 8mm to 26mm thick	Set of 4	50kN
01/4666	V-Notch faces for samples 4mm to 17mm diameter	Set of 4	50kN
01/4667	V-Notch faces for samples 8mm to 21mm diameter	Set of 4	50kN
01/4668	V-Notch faces for samples 13mm to 26mm diameter	Set of 4	50kN
01/4669	Diamond coated faces for samples 0mm to 17mm thick	Set of 4	50kN
01/4670	Diamond coated faces for samples 3mm to 21mm thick	Set of 4	50kN
01/4671	Crosscut coated faces for samples 8mm to 26mm thick	Set of 4	50kN
01/4672	Crosscut faces for samples 0mm to 20mm thick	Set of 4	50kN
01/4673	Crosscut faces for samples 10mm to 30mm thick	Set of 4	50kN
01/4674	Crosscut faces for samples 20mm to 40mm thick	Set of 4	50kN
01/4675	V-Notch faces for samples 4mm to 20mm diameter	Set of 4	50kN
01/4676	V-Notch faces for samples 12mm to 30mm diameter	Set of 4	50kN
01/4677	V-Notch faces for samples 24mm to 40mm diameter	Set of 4	50kN

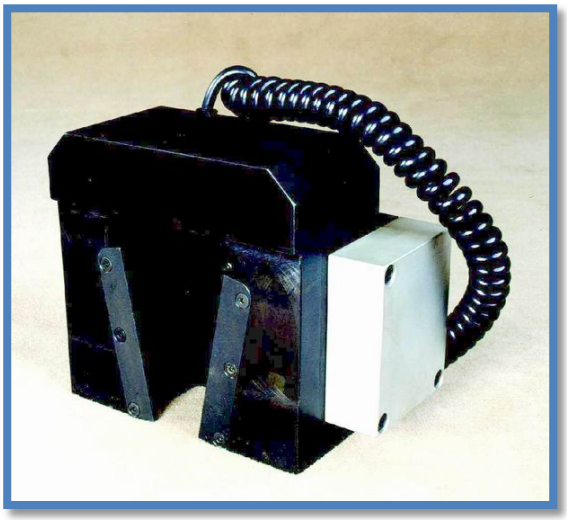

AMETEK
TEST & CALIBRATION INSTRUMENTS

Wedge Grips

Self Tightening wedge action grips

A range of wedge action grips for general tension testing of metals and plastic. The wedge design of the grip means the grip tightens on the sample as the force increases, initial force can be applied by various methods such as side lever, capstan action wheel or screw action. Faces are interchangeable for different samples types and dimensions.

Steel, manganese phosphate coated
Temperature range 0 – to +130º C

Part Number	Description	Weight	Rating	Fixing
01/4678	Wedge grip without faces for sample up to 50mm x 50mm	24kg	50kN	1 ¼ inch

Face options

Part Number	Description	Quantity	Rating
01/4679	Carrier insert for insert jaw sets	Set of 4	50kN
01/4680	Crosscut inserts for samples 0mm to 20mm thick	Set of 4	50kN
01/4681	Crosscut inserts for samples 10mm to 30mm thick	Set of 4	50kN
01/4682	Crosscut inserts for samples 20mm to 40mm thick	Set of 4	50kN
01/4683	Crosscut inserts for samples 28mm to 48mm thick	Set of 4	50kN
01/4684	V-Notch inserts for samples 6mm to 20mm diameter	Set of 4	50kN
01/4685	V-Notch inserts for samples 16mm to 30mm diameter	Set of 4	50kN
01/4686	V-Notch inserts for samples 26mm to 40mm diameter	Set of 4	50kN
01/4687	76mm x60mm crosscut faces for samples 0mm to 20mm diameter	Set of 4	50kN
01/4688	76mm x60mm crosscut faces for samples 20mm to 40mm diameter	Set of 4	50kN
01/4689	76mm x60mm crosscut faces for samples 40mm to 60mm diameter	Set of 4	50kN
01/4690	V-Notch faces for samples 6mm to 20mm diameter	Set of 4	50kN
01/4691	V-Notch faces for samples 16mm to 30mm diameter	Set of 4	50kN
01/4692	V-Notch faces for samples 26mm to 40mm diameter	Set of 4	50kN
01/4693	V-Notch faces for samples 36mm to 50mm diameter	Set of 4	50kN

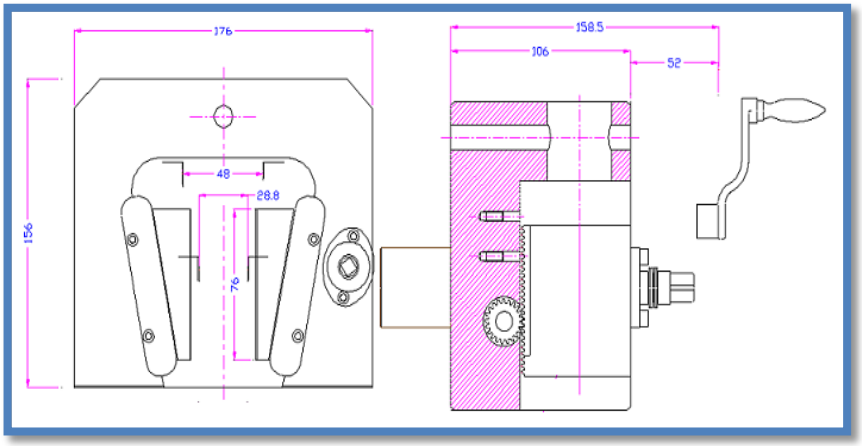

AMETEK
TEST & CALIBRATION INSTRUMENTS

Wedge Grips

Screw tightening wedge action grips

A range of wedge action grips for general tension testing of metals and plastic. The wedge design of the grip means the grip tightens on the sample as the force increases, initial force can be applied by various methods such as side lever, capstan action wheel or screw action. Faces are interchangeable for different samples types and dimensions.

Steel, manganese phosphate coated
Temperature range 0 – to +130º C

Part Number	Description	Weight	Rating	Fixing
01/4694	Wedge grip without faces	46kg	100kN	1 ¼ inch

Face options

Part Number	Description	Opening	Quantity	Rating
01/4696	60mm x 110mm crosscut jaw faces	0-30mm	Set of 4	150kN
01/4697	60mm x 110mm crosscut jaw faces	26-50mm	Set of 4	150kN
01/4698	V-Notch faces for 6mm to 30mm diameter samples	6-30mm	Set of 4	150kN
01/4699	V-Notch faces for 30mm to 50mm diameter samples	30-50mm	Set of 4	150kN
01/4700	Carrier insert for insert jaw sets	N/A	Set of 4	150kN
01/4701	100mm x 50mm, crosscut inserts for 01/4700	0-30mm	Set of 4	150kN
01/4702	100mm x 50mm, crosscut inserts for 01/4700	4-34mm	Set of 4	150kN
01/4703	100mm x 50mm, crosscut inserts for 01/4700	10-40mm	Set of 4	150kN
01/4704	100mm x 50mm, crosscut inserts for 01/4700	20-50mm	Set of 4	150kN
01/4705	V-Notch faces for 6mm to 34mm diameter samples	N/A	Set of 4	150kN
01/4706	V-Notch faces for 12mm to 40mm diameter samples	N/A	Set of 4	150kN
01/4707	V-Notch faces for 16mm to 44mm diameter samples	N/A	Set of 4	150kN

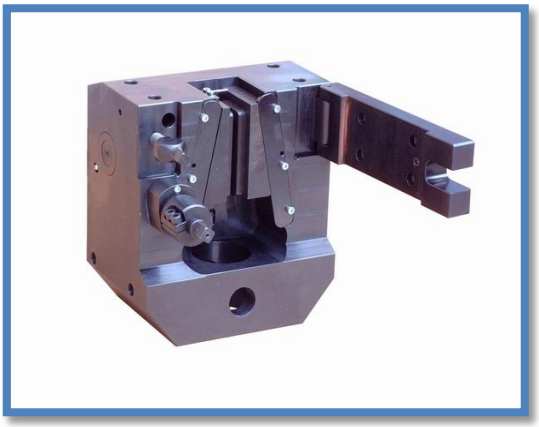

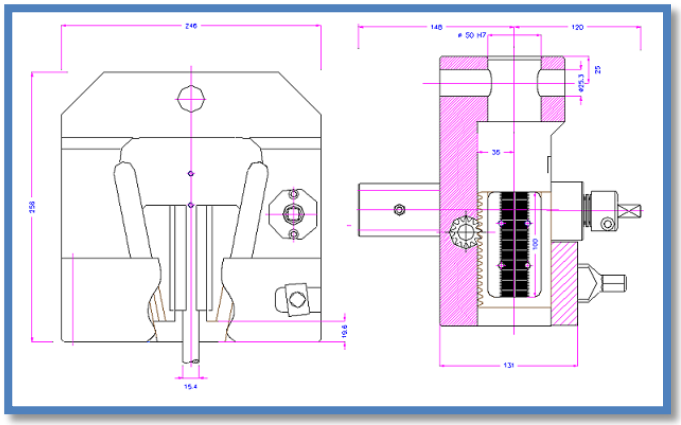

01/4694

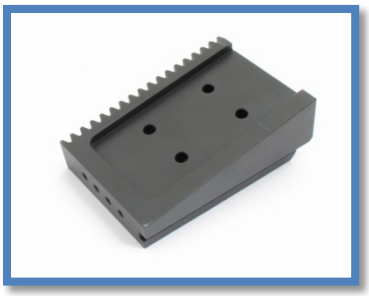

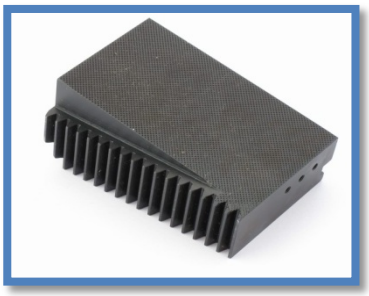

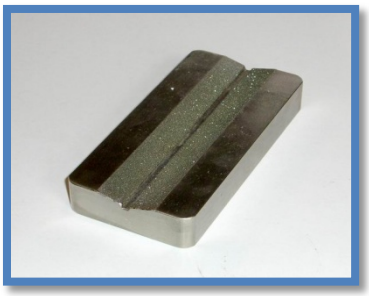

AMETEK
TEST & CALIBRATION INSTRUMENTS

Wedge Grips

Screw tightening wedge action grips

A range of wedge action grips for general tension testing of metals and plastic. The wedge design of the grip means the grip tightens on the sample as the force increases, initial force can be applied by various methods such as side lever, capstan action wheel or screw action. Faces are interchangeable for different samples types and dimensions.

Steel, manganese phosphate coated
Temperature range 0 – to +130º C

Part Number	Description	Weight	Rating	Fixing
01/4695	Wedge grip without faces	50kg	150kN	50mm

Face options

Part Number	Description	Opening	Quantity	Rating
01/4696	60mm x 110mm crosscut jaw faces	0-30mm	Set of 4	150kN
01/4697	60mm x 110mm crosscut jaw faces	26-50mm	Set of 4	150kN
01/4698	V-Notch faces for 6mm to 30mm diameter samples	6-30mm	Set of 4	150kN
01/4699	V-Notch faces for 30mm to 50mm diameter samples	30-50mm	Set of 4	150kN
01/4700	Carrier insert for insert jaw sets	N/A	Set of 4	150kN
01/4701	100mm x 50mm, crosscut inserts for 01/4700	0-30mm	Set of 4	150kN
01/4702	100mm x 50mm, crosscut inserts for 01/4700	4-34mm	Set of 4	150kN
01/4703	100mm x 50mm, crosscut inserts for 01/4700	10-40mm	Set of 4	150kN
01/4704	100mm x 50mm, crosscut inserts for 01/4700	20-50mm	Set of 4	150kN
01/4705	V-Notch faces for 6mm to 34mm diameter samples	N/A	Set of 4	150kN
01/4706	V-Notch faces for 12mm to 40mm diameter samples	N/A	Set of 4	150kN
01/4707	V-Notch faces for 16mm to 44mm diameter samples	N/A	Set of 4	150kN

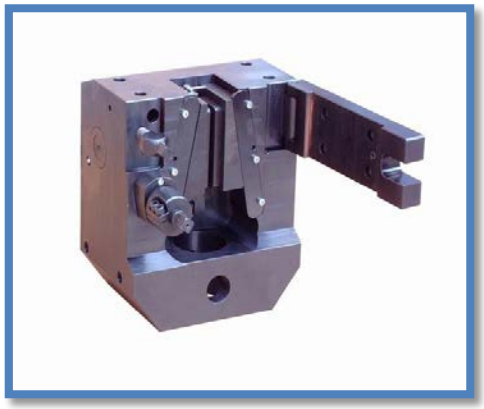

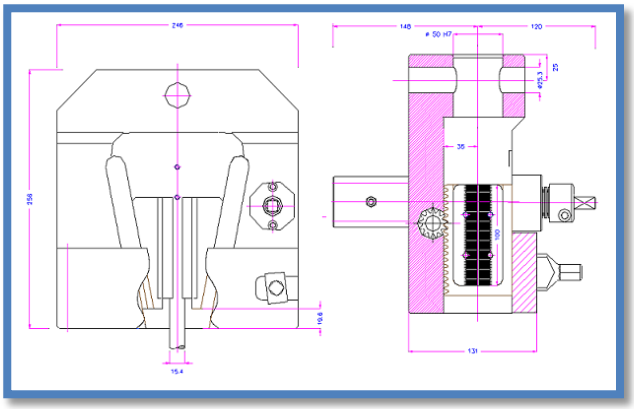

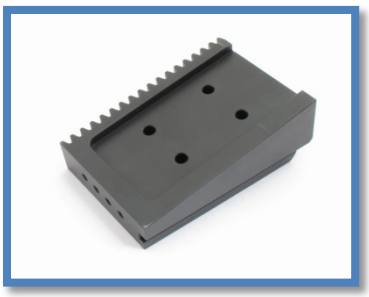

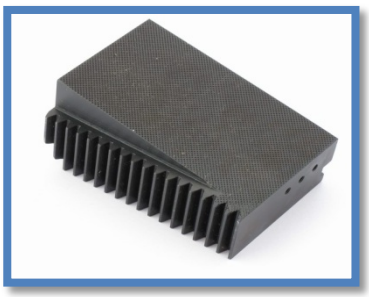

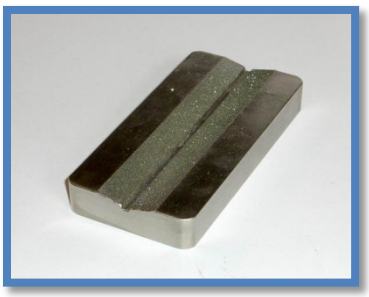

Wedge Grips

Capstan action wedge action grips

A range of capstan action wedge action grips for general tension testing of metals and plastic. The wedge design of the grip means the grip tightens on the sample as the force increases, initial force can be applied by various methods such as side lever, capstan action wheel or screw action. Faces are interchangeable for different samples types and dimensions.

Steel, manganese phosphate coated
Temperature range 0 – to +130º C

Part Number	Description	Weight	Rating	Fixing
01/4708	Capstan action wedge grip without faces	5kg	20kN	5/8 inch

Face options

Part Number	Description	Opening	Quantity	Rating
01/4709	40mm x 52mm crosscut faces for 01/4708	0-10mm	Set of 4	20kN
01/4710	V-Notch faces, 3mm to 10mm Ø samples for 01/4708	N/A	Set of 4	20kN

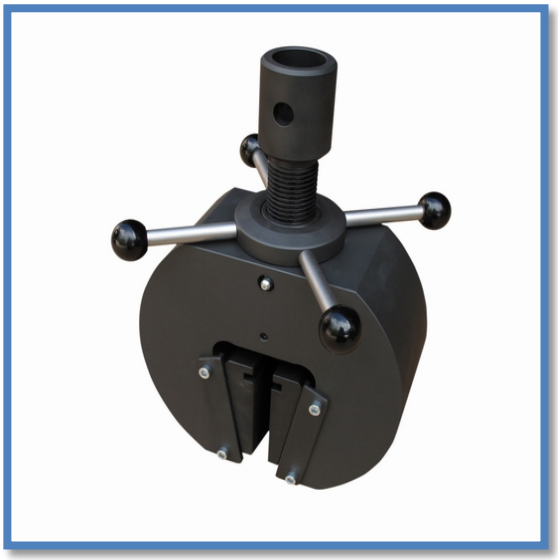

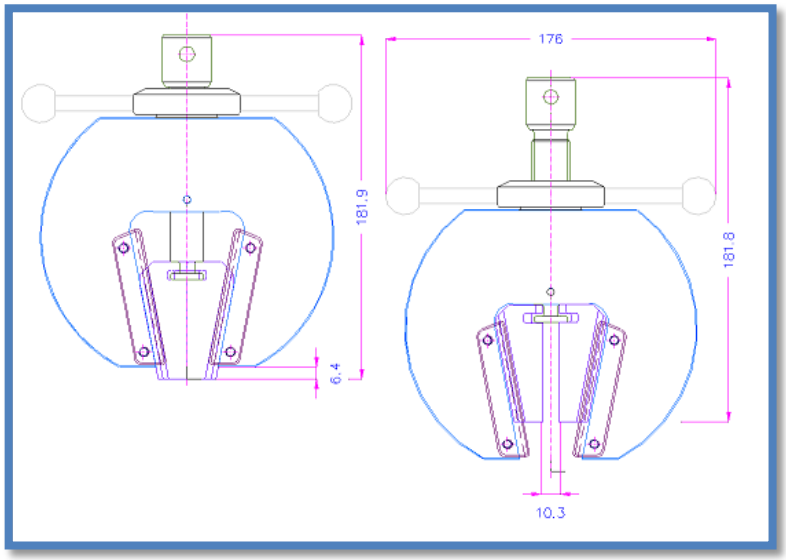

Wedge Grips

Capstan action wedge action grips

A range of capstan action wedge action grips for general tension testing of metals and plastic. The wedge design of the grip means the grip tightens on the sample as the force increases, initial force can be applied by various methods such as side lever, capstan action wheel or screw action. Faces are interchangeable for different samples types and dimensions.

Steel, manganese phosphate coated
Temperature range 0 – to +130º C

Part Number	Description	Weight	Rating	Fixing
01/4711	Capstan action wedge grip without faces	16kg	50kN	1 ¼ inch

Face options

Part Number	Description	Opening	Quantity	Rating
01/4712	66mm x 80mm crosscut faces for 01/4711	0-17mm	Set of 4	50kN
01/4713	V-Notch faces, 4mm to 17mm Ø samples for 01/4711	N/A	Set of 4	50kN

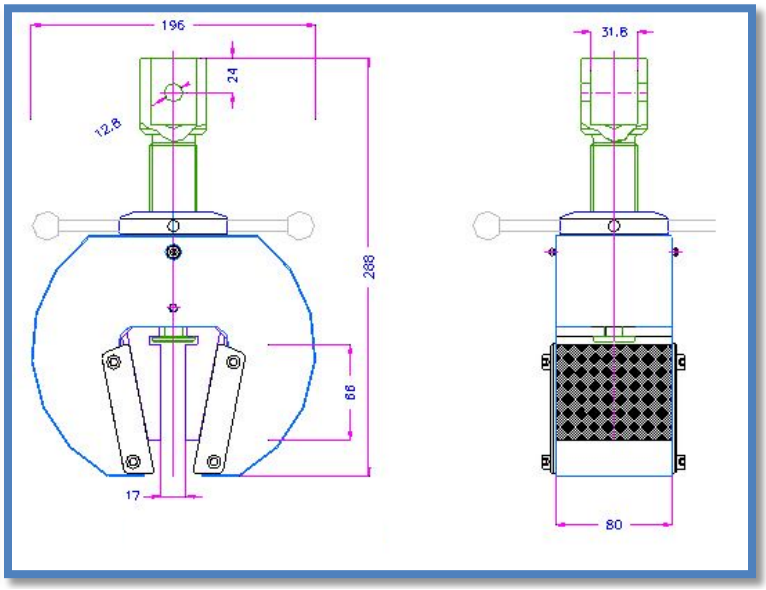

Wedge Grips

Capstan action wedge action grips

A range of capstan action wedge action grips for general tension testing of metals and plastic. The wedge design of the grip means the grip tightens on the sample as the force increases, initial force can be applied by various methods such as side lever, capstan action wheel or screw action. Faces are interchangeable for different samples types and dimensions.

Steel, manganese phosphate coated
Temperature range 0 – to +130º C

Part Number	Description	Weight	Rating	Fixing
01/4714	Capstan action wedge grip without faces	48kg	100kN	1 ¼ inch

Face options
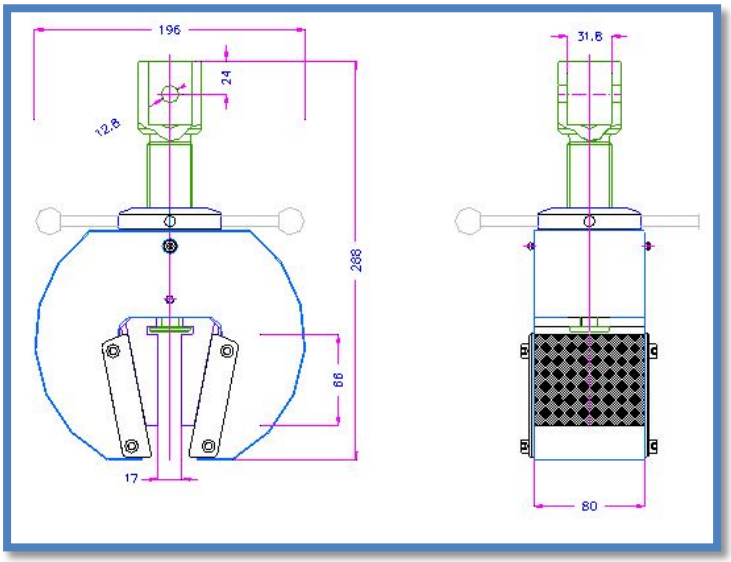
Part Number	Description	Opening	Quantity	Rating
01/4715	96mm x 100mm crosscut faces for 01/4714	0-16mm	Set of 4	100kN
01/4716	V-Notch faces, 4mm to 16mm Ø samples for 01/4714	N/A	Set of 4	100kN